SB52 Development Kit Hardware

Quick Start Guide

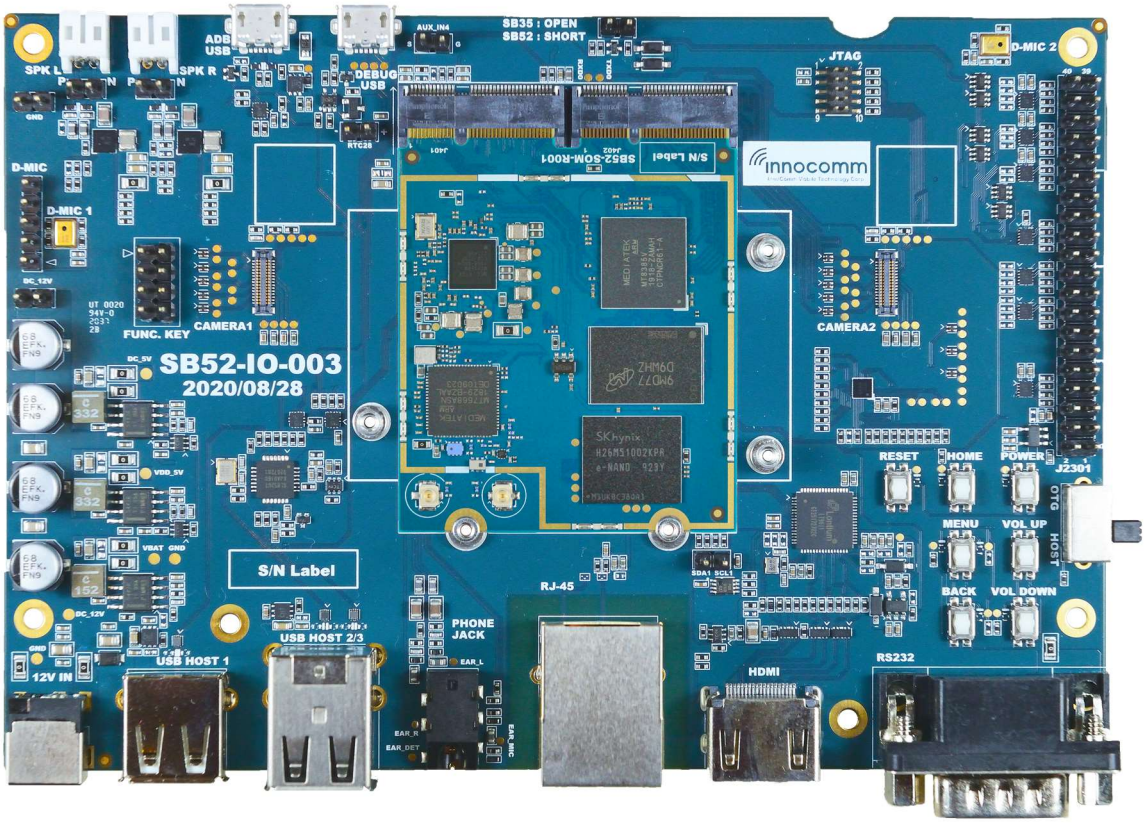

Revisions History

Date	Version Number	Document Changes
2020/10/29	0.1	Initial Draft
2020/10/30	0.2	Update SB52 EVM board Dimension

Table of Contents

1 Overview

1.1 General Information and Features

SB52 SOM is a high-performance System on Module (SOM) designed based on the i500 processor from MediaTek. The i500 device, with integrated Bluetooth, FM, WLAN, and GPS modules, is a highly integrated baseband platform incorporating application processing subsystems. The chip integrates ARM®Cortex-A73/A53 MPCore operating up to 2GHz and powerful multi-standard video codec.

SB52 SOM:	**SB52 IO Board:**
● i500 application processor ■ 4x Cortex-A73 @ 2.0GHz ■ 4x Cortex-A53 @ 2.0GHz ● 2GB LPDDR4 RAM ● 16GB eMMC ● Power Management IC (PMIC) ● Wi-Fi 802.11 a/b/g/n/ac, MIMO	● HDMI ● 1x 2 data lane DSI FPC connector for display ● 2x 4 data lane CSI FPC Connector for camera ● 1x JTAG for debug ● 1x ADB USB/ 3x Host USB ● USB to serial converter for debug ● 10/100 Ethernet ● 1x Earphone jack ● 2x 4.6W stereo SPK out ● 2x Digital MIC ● Keys: ■ Power On ■ Reset ■ Home ■ 4x function keys ● 1x RS232 DB9 ● 1x 40-Pin GPIO 2.54mm pin header

1.2 Get to Know the EVK

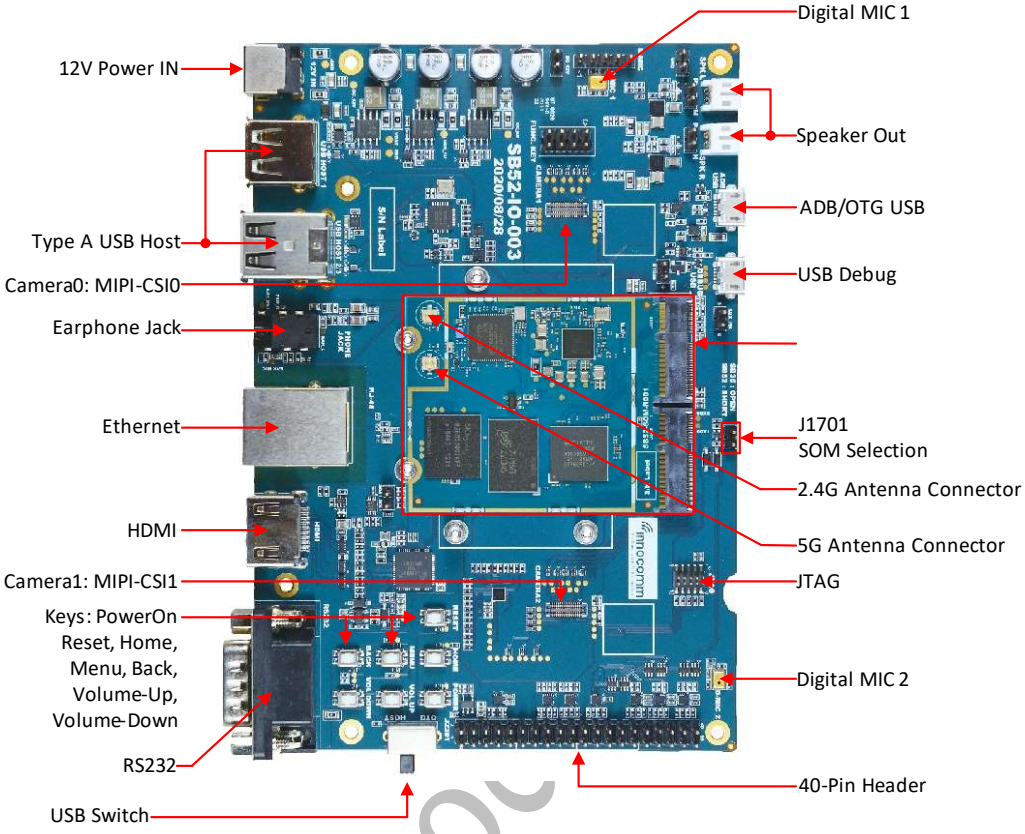

Figure 1. Top view of SB52 development kit

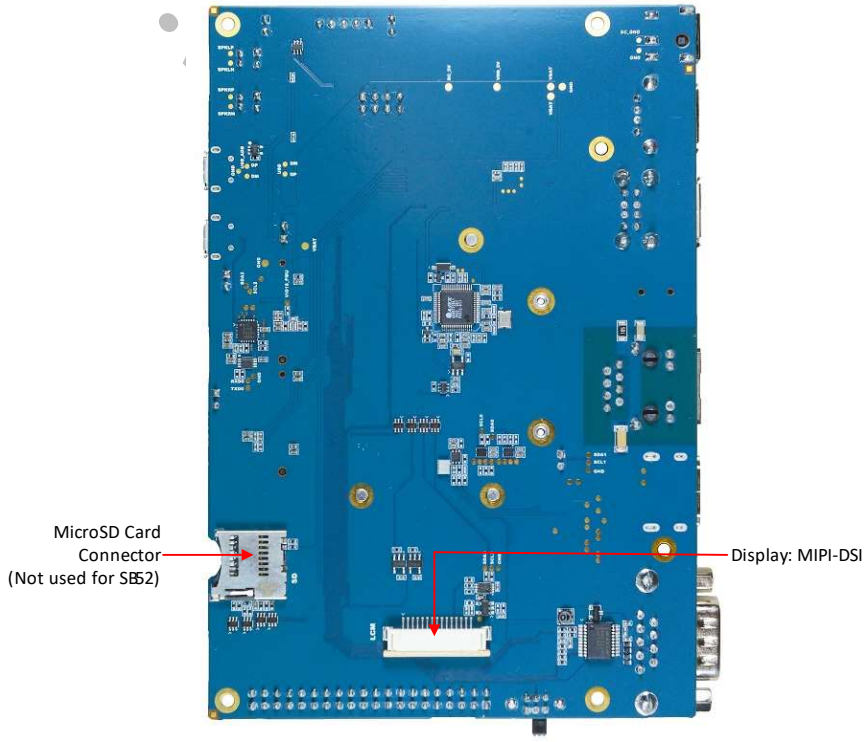

Figure 2. Bottom view of SB52 development kit

1.3 Architecture and Block Diagram

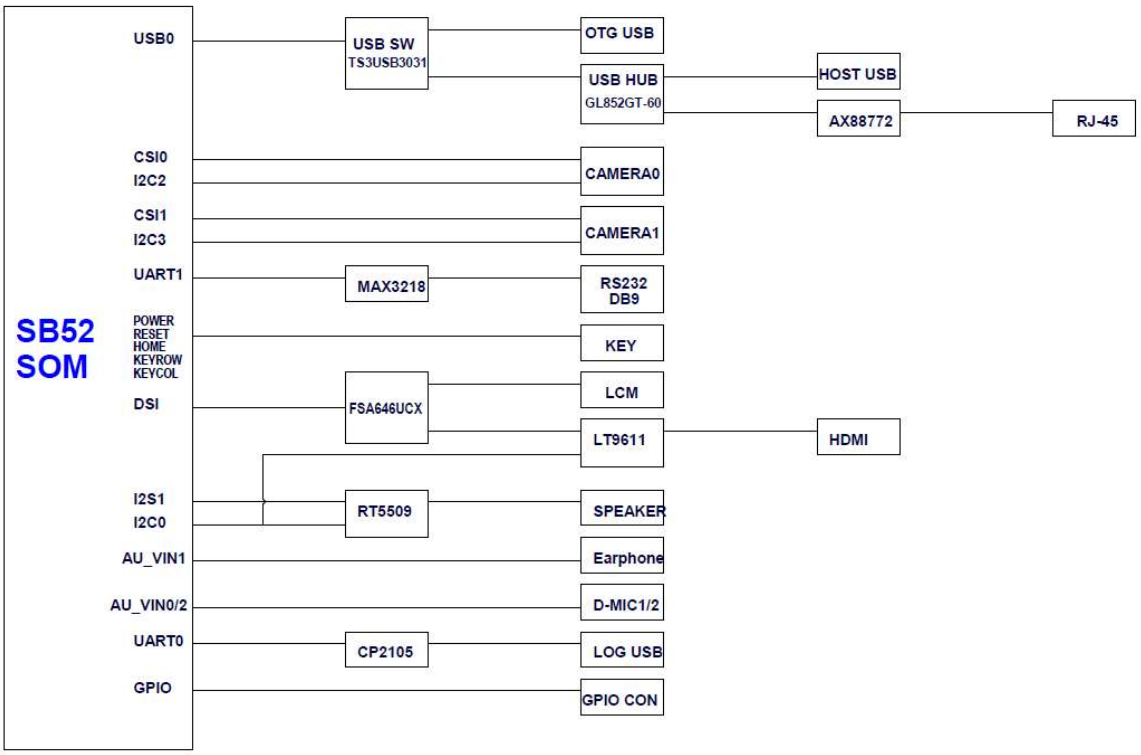

Figure 3. SB52 Development Kit System Block Diagram

1.4 Dimension

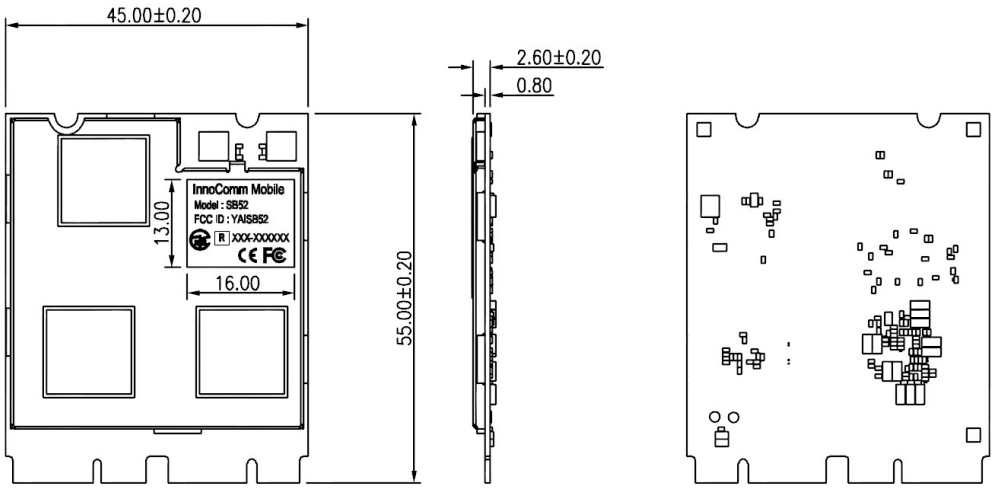

Figure 4. SB52 SOM board Dimension

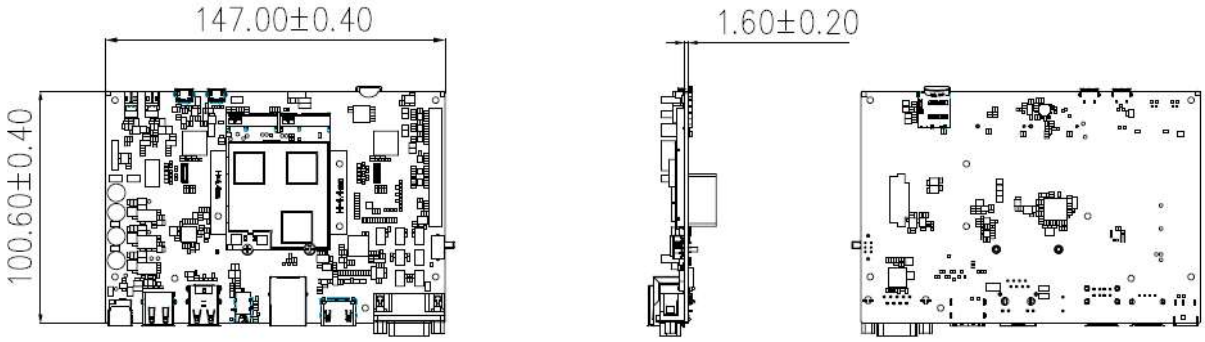

Figure 5. SB52 EVM board Dimension

2 Getting Started

2.1 Unpack the Kit

SB52-SOM EVM is shipped with the items listed in Table 1.

Table 1. Kit Contents

Item	Description
EVM board	SB52 EVM
Power Supply	AC Adapter, 12V/4.16A
Camera module x2	OV8856 CMOS Sensor, 8-megapixel, Resolution 3264x2448 [4]
Wifi/BT antenna x2	
Software	Android BSP image programmed in eMMC

2.2 Prepare the Accessories

The following items are recommended to run the SB52 EVM

Table 2. Customer Supplied Accessories

Item	Description
HDMI Display	HDMI display that supports resolution of 1080p
HDMI Cable	HDMI cable that connect board to HDMI display
Mouse	USB Mouse
USB Cable	For Debug use

2.3 Download Software & Tools

For updating the firmware of SB52 EVK, the tools and the corresponding items are list in the following table.

Table 3. Software & Tools

Item	Description
Documentation	● Schematic, layout, and part location map ● Quick Start Guide ● SB52_Flash_Tool_Download_Guide
Software	● Android BSP ● Yocto Linux BSP
Tool	● MTK SP_Flash_Tool

If you need the BSP and the SP_Flash_Tool, please contact Innocomm sales.

3 Setting Up The System

3.1 Connect USB Debug Cable

Connect the micro-B end of a USB cable into debug port J2025. Connect the other end of the cable to a PC acting as a host terminal. Two UART connections will appear on the PC. The console print will output on "Enhanced COM port," which can be found in "Device Manager" of the PC.

If the serial port is not recognized, Windows users may need to update the serial drivers on your computer. The drivers can be found at **https://www.silabs.com/products/development-tools/software/usb-to-uart-bridge-vcp-drivers**

Open the terminal window (i.e., Hyper Terminal or Tera Term), choose the COM port number that corresponds to the "Enhanced COM port" and apply the following configuration.

- Baud rate: 962100
- Date bits: 8
- Parity: None
- Flow control: None

3.2 Connect HDMI Display/DSI LCM

Connect the HDMI cable to CN2201 on the EVM (MIPI DSI Connector) and connect the other end to a HDMI display panel.

In addition to HDMI, SB52 EVM can also support 7" Touchscreen Display on J2001, MIPI-DSI interface. The information of 7" Touchscreen Display can be found on the following website.
https://www.raspberrypi.org/products/raspberry-pi-touch-display

Regarding how to install the 7" touch display on SB52 EVK, please refer to "***SB52 MediaTek i500 & Raspberry Pi 7" Touch Screen User Guide***"

Please be kindly noted that HDMI interface and MIPI-DSI interface are mutually exclusively. That is, only one interface can work at the same time and MIPI-DSI has the higher priority.

3.3 Connect Power Supply

SB52 EVM can support two different ways to power on the system

1. Power on from USB
2. Power on by Power key

Steps of Powering on from USB

- Connect the micro-B end of a USB cable into adb/OTG port CN1501.
- Connect the other end of the cable to a PC.
- As soon as connecting the DC plug on the AC adapter to the DC Jack CN1401 on SB52 EVM, the system will power on.

Steps of Powering on by Power key

- Connect the DC plug on the AC adapter to the DC Jack CN1401 on SB52 EVM.
- Press Power key for one second at least, then the system will power on.

3.4 Board Boot up

As the board boots up, you will see Innocomm Logo appear in the screen, and then you will see the Android logo, then the Android desktop.

3.5 USB Switch

Because i500 has only one USB port, therefore, SB52 EVM use a USB switch, SW1501, to control the USB mode.

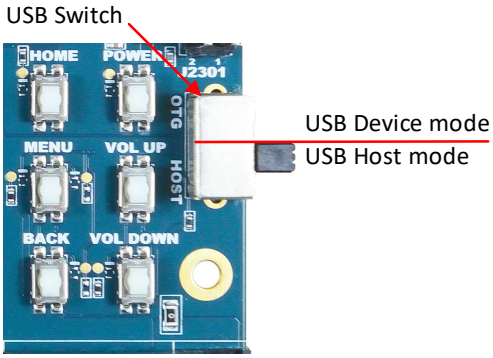

Fig 6. USB Switch at position of USB host mode

If SW1501 switches to position of USB host mode, then USB of SB52 will play the role of the USB host by type A USB connectors, CN1701 and CN1702.

Otherwise if SW1501 switches to position of USB device mode, SB52 EVM will act as a USB device by CN1501. In addition, the adb will work at this port, too.

3.6 EVM board 40-pin Header (Expansion Header)

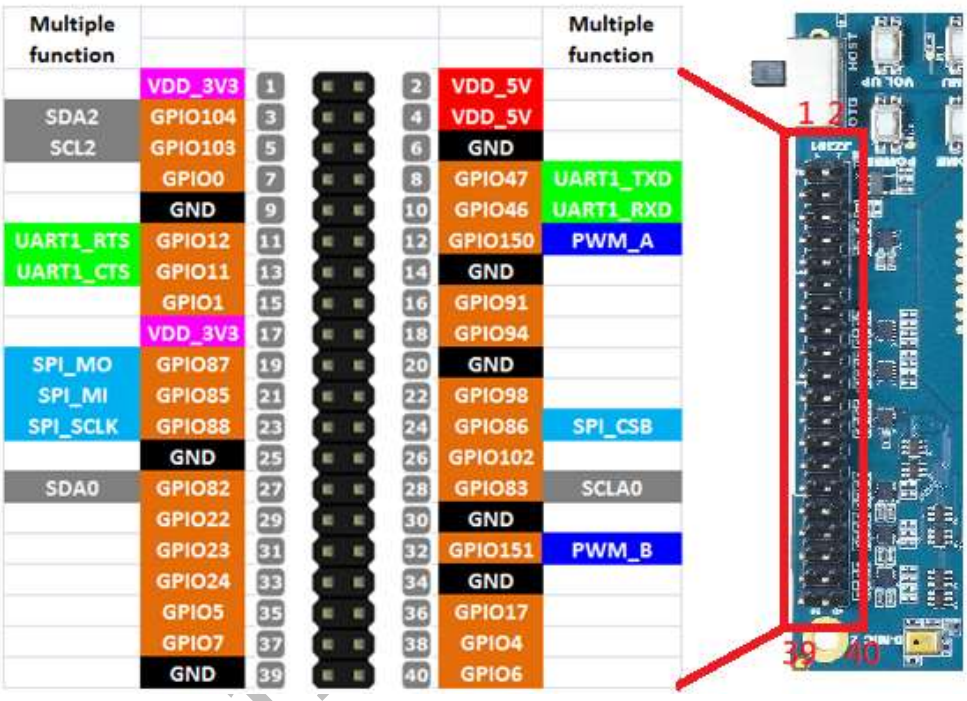

Figure3-2Expansion header

The expansion connector is a 40-pin header that contains I2Cs, UARTs, SPI, PWM, GPIOs, and power for user use. And all GPIO pin-outs are 3.3V level.

UART interface supports the following serial data transmit/receive protocols and configurations:

- Supports word lengths from 5 to 8 bits with an optional parity bit and 1 or 2 stop bits
- UART1 port support hardware automatic flow control
- Supports baud rates from 110bps up to 961,200bps

I2C interfaces which provide a serial interface for external devices and supports the following configurations:

- Adjustable clock speed for LS/FS mode operation

- Supports 7-bit/10-bit addressing
- Supports high-speed mode

SPI interface supports the following configurations:

- Data rate up to 55 Mbps
- support Master/Slave modes, a chip selects to support multiple peripherals

PWM interface supports the following configurations:

- PWM supports Old mode and FIFO mode
- PWM duty cycle range: 0% ~ 100%; 1024 steps
- The BCLK can be selected as 26MHz or 68MHz or 125MHz

Power interface supports the following configurations:

- VDD_5V power can provide 5V/4A but share with HOST USB 5V and SPK AMP power
- VDD3V3 (VGPIOEXT_3V3) power can provide 3.3V/300mA

Table 3-1 Pin assignments of 40-pin header

Pin #	Function	Multi-pin	Pin #	Function	Multi-pin
1	**VDD_3V3**		2	**VDD_5V**	
3	I2C2_SDA	Camera1 I2C	4	**VDD_5V**	
5	I2C2_SCL	Camera1 I2C	6	**GND**	
7	GPIO0	DC_5V enable	8	UART1_TXD	RS232
9	**GND**		10	UART1_RXD	RS232
11	UART1_RTS	RS232	12	GPIO150(PWM)	
13	UART1_CTS	RS232	14	**GND**	
15	GPIO1	DSI switch SEL	16	GPIO91	KEY
17	**VDD_3V3**		18	GPIO94	KEY
19	SPI_MOSI	HDMI I2S	20	**GND**	
21	SPI_MISO	HDMI I2S	22	GPIO98	Camera2 PWDN
23	SPI_SCLK	HDMI I2S	24	SPI_CS0	HDMI I2S
25	**GND**		26	GPIO102	Camera2 reset
27	I2C0_SDA	Audio AMP / HDMI I2C	28	I2C0_SCL	Audio AMP / HDMI I2C
29	GPIO22		30	**GND**	
31	GPIO23		32	GPIO151(PWM)	Ethernet PME
33	GPIO24		34	**GND**	
35	GPIO5	RS232 Shutdown	36	GPIO17	Audio AMP reset
37	GPIO7	LCM 3V3 enable	38	GPIO4	Camera2 power enable
39	GND		40	GPIO6	RS232 enable

4 Reference Documents

[1]. MT8167A_Technical _Brief datasheet.
[2]. MT6385_PMIC_Data_Sheet.
[3]. MT7668AUN_MT7668AEN_MT7668ASN_Datasheet
[4]. OV80-0MA6-A0 SPEC-模组
[5]. OV8856 datasheet
[6]. SB52 - MediaTek i500 Raspberry Pi 7.pdf